PROLUX COMMERCIAL

PLCRS7P

For your safety, please read the Owner's Manual in its entirety.

Instruction Manual

Congratulations on the purchase of your new Prolux PLCRS7P Vacuum!

The PLCRS7P was made with one purpose: to get your cleaning done quickly, so you can spend your time doing what you enjoy. Lightweight, easy to use, and a powerful brush roll to clean almost any surface in your home or car. Why didn't you get one of these sooner?

Table of Contents

Important Safety Instructions 4

Quick Assembly 6

Specifications 7

Warranty 8

Safety 9

Overview 12

Assembly 13

Operation 19

Maintenance 23

Troubleshooting 28

Frequently Asked Questions 29

Warranty 30

Important Safety Instructions

When using an electrical appliance, basic precautions should always be followed, including the following:

READ ALL INSTRUCTIONS BEFORE USING THIS APPLIANCE

Failure to follow the warnings and instructions may result in electric shock, fire and/or serious injury.

WARNING – To reduce the risk of fire, electric shock, or injury:

1. Do not use outdoors or on wet surfaces.
2. Do not allow to be used as a toy. Close attention is necessary when used by or near children, pets or plants.
3. Use only as described in this manual. Use only manufacturer's recommended attachments
4. Do not use with damaged cord or charger. If appliance is not working as it should, has been dropped, damaged, left outdoors, or dropped into water, return it to a service center.
5. Do not pull or carry by cord, use cord as a handle, close a door on cord, or pull cord around sharp edges or corners. Do not run appliance over cord. Keep cord away from heated surfaces.
6. Do not unplug by pulling on cord. To unplug, grasp the plug, not the cord.
7. Do not handle charger, including charger plug, and charger terminals with wet hands
8. Do not put any object into openings. Do not use with any opening blocked; keep free of dust, lint, hair, and anything that may reduce air flow.
9. Keep hair, loose clothing, fingers, and all parts of body away from openings and moving parts.
10. Use extra care when cleaning on stairs.
11. Do not use to pick up flammable or combustible liquids, such as gasoline, or use in areas where they may be present.
12. Do not pick up anything that is burning or smoking, such as cigarettes, matches, or hot ashes.
13. Do not use without dust container and filter.
14. Prevent unintentional starting. Ensure the switch is in the off-position before connecting to battery pack, picking up or carrying the appliance. Carrying the appliance with your finger on the switch or energizing appliance that have the switch on invites accidents.
15. Disconnect the battery pack from the appliance before making any adjustments, changing accessories, or storing appliance. Such preventive safety measures reduce the risk of starting the appliance accidentally.

16. Recharge only with the charger specified by the manufacturer. A charger that is suitable for one type of battery pack may create a risk of fire when used with another battery pack.
17. Use appliances only with specifically designated battery packs. Use of any other battery packs may create a risk of injury and fire.
18. When battery pack is not in use, keep it away from other metal objects, like paper clips, coins, keys, nails, screws or other small metal objects, that can make a connection from one terminal to another. Shorting the battery terminals together may cause burns or a fire.
19. Under abusive conditions, liquid may be ejected from the battery; avoid contact. If contact accidentally occurs, flush with water. If liquid contacts eyes, additionally seek medical help.
20. Liquid ejected from the battery may cause irritation or burns.
21. Do not use a battery pack or appliance that is damaged or modified. Damaged or modified batteries may exhibit unpredictable behavior resulting in fire, explosion or risk of injury.
22. Do not expose a battery pack or appliance to fire or excessive temperature. Exposure to fire or temperature above 130°C may cause explosion.
23. Follow all charging instructions and do not charge the battery pack or appliance outside of the temperature range specified in the instructions. Charging improperly or at temperatures
24. outside of the specified range may damage the battery and increase the risk of fire.
25. Have servicing performed by a qualified repair person using only identical replacement parts.
26. This will ensure that the safety of the product is maintained.
27. Do not modify or attempt to repair the appliance or the battery pack except as indicated in the instructions for use and care.
28. The appliance should be stored, used and charged at a temperature range 40°F~104°F.

Specifications

CFM	30
Water Lift	102”
Suction Power	26 kPa
Filtration Type	HEPA
Charge Time	4 hours
Battery Capacity	2500 mAh
Warranty	1-Year/350 Hour Motor Warranty

Run Times

Motor Speed	**Time (with power head)**	**Time (without power head)**
Low	35 minutes	40 minutes
Medium (default)	21 minutes	26 minutes
High	15 minutes	18 minutes

Features

Bagless ☑

Extendable wand ☑

Cordless ☑

Easy to use ☑

Wall mounted ☑

Easy charging ☑

Full size or handheld use ☑

Removeable battery ☑

Charge battery 3 different ways ☑

LED lights ☑

Easy brush roll removal ☑

Cleaning tool ☑

Power head connects directly to vacuum ☑

Safety

⚠WARNING

Read the owner's manual in its entirety before using this product. Failure to do so can result in serious injury or death. Prolux takes no responsibility for damages/injuries due to violations of the following operating instructions.

Notices for your safety are specially marked. Always observe these notices to avoid any damage to the appliance.

WARNING: Warning concerning health hazards describing possible risks of injury.

ATTENTION: Warning concerning possible dangers to the appliance or other objects.

NOTE: Highlight tips for you.

Keep the operating manual for reference. Include the operating manual if you pass the appliance to third parties.

WARNING - To reduce the risk of fire, electric shock, or injury:

1. Do not leave the vacuum cleaner plugged in. Unplug from the outlet when not in use, or before servicing.
2. Use only as described in this manual. Use only the recommended attachments and replacement parts.
3. Do not use the appliance outdoors, or on wet surfaces, and do not use it for wet pickup/cleanup.
4. Do not use the charger with a damaged cord or plug. If it is not working as it should, has been dropped, damaged, left outdoors, or dropped into water, contact us for servicing before use.
5. Do not pull or carry the charger by its power cord, do not use the power cord as a handle, or close the door on the power cord. Keep the power cord away from heated surfaces.
6. Only use extension cords suited to the power requirements of the appliance.
7. Never immerse the appliance in water or other liquids.
8. Only operate the appliance if your outlet voltage is the same as indicated on the appliance's nameplate. Using the wrong voltage can destroy the appliance.
9. Do not unplug the power cord from your wall by pulling on the cord. To unplug, grasp the end of the plug, not the cord.
10. Do not handle the power cord/plug or vacuum cleaner with wet hands.

11. Do not put any object into the openings of the vacuum. Do not use the vacuum with any openings blocked. Keep openings free of dust, lint, hair, and anything that may reduce airflow.
12. Keep hair, loose clothing, fingers, and all body parts away from openings and moving parts of the vacuum.
13. Use extra care when cleaning on stairs.
14. Do not use it to pick up flammable or combustible liquids, such as gasoline, or in areas where they may be present.
15. Do not pick up anything that is burning or smoking, such as cigarettes, matches, or hot ashes.
16. Do not use the unit without filters in place.
17. If the power cord is damaged, the manufacturer or an authorized service center must replace it, to avoid a hazard.
18. This appliance is not intended for use by persons (including children) with reduced physical, sensory, or mental capabilities, or lack of experience and knowledge unless they have been given supervision or instructions concerning the use of the appliance by a person responsible for their safety.

Do not vacuum or clean:

- Hair and other parts of the body. They could be sucked in and cause injury.
- Pieces of clothing (e.g., shoelaces, scarves, etc.). They could be sucked in and cause injury.
- Water or other liquids, especially moisture from carpet cleaning agents. Moisture inside the appliance can lead to short-circuiting.
- Toner dust (from laser printers, copying machines, etc.). There is a danger of fire or explosion.
- Pointed objects, glass shards, nails, etc. Such objects destroy the filters.
- Plaster, cement, fine drilling dust, makeup. etc. The filters may clog causing damage to the appliance.
- Never use the appliance near flammable or explosive materials. There is a danger of fire or explosion.
- Never use the appliance outdoors. There is a danger of rain and dirt destroying the appliance.

Children

- Never leave the appliance unattended, and always take special precautions if children or persons who cannot judge dangers are nearby.
- Proper storage, supervision, and keeping children at a safe distance during operation will help avoid the following dangers:
    - Strangulation by the cord.
    - Tripping accidents.
    - Getting hair, appendages, or clothing stuck in vacuum ports.

Persons (including children) who are unable to safely operate the appliance because of physical, sensory, or mental abilities, or lack of experience or knowledge should only use this appliance under the supervision or instruction of a responsible person. <u>Packing materials are not toys. There is a danger of suffocation, KEEP OUT OF REACH OF CHILDREN</u>

1. Aluminum extendable wand
2. PLCRS7P Vacuum Body
3. Wall Mount
4. Duster Brush
5. Crevice tool
6. EBK-250 Electric Powerhead
7. AC Adapter
8. 2 x Batteries

Assembly

1. Unpack everything from the box, making sure all the parts are there (see overview image on previous page).

2. Extend the wand.

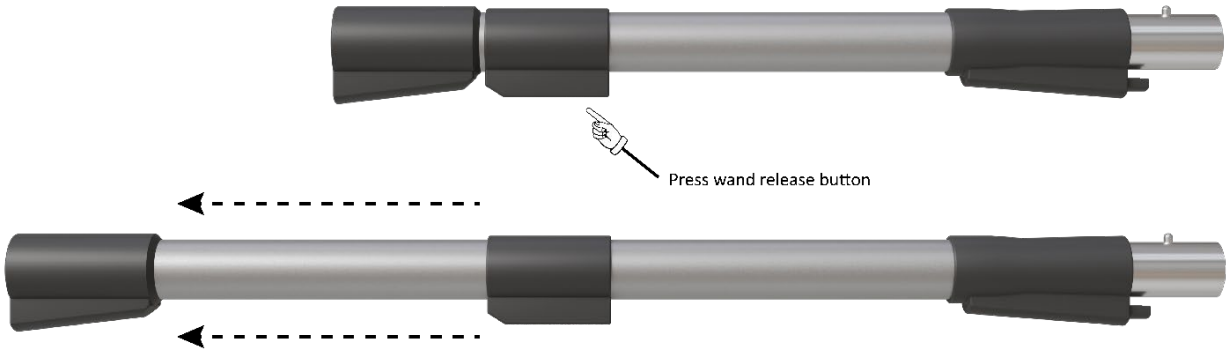

3. Attach the upper end of the wand to the vacuum.

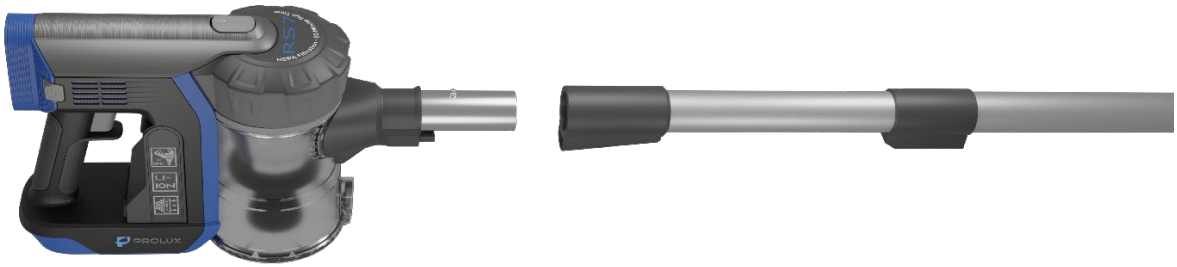

---

4. Attach the power head to the lower section of the wand.

5. Mount tool caddy to the wall using the included hardware.

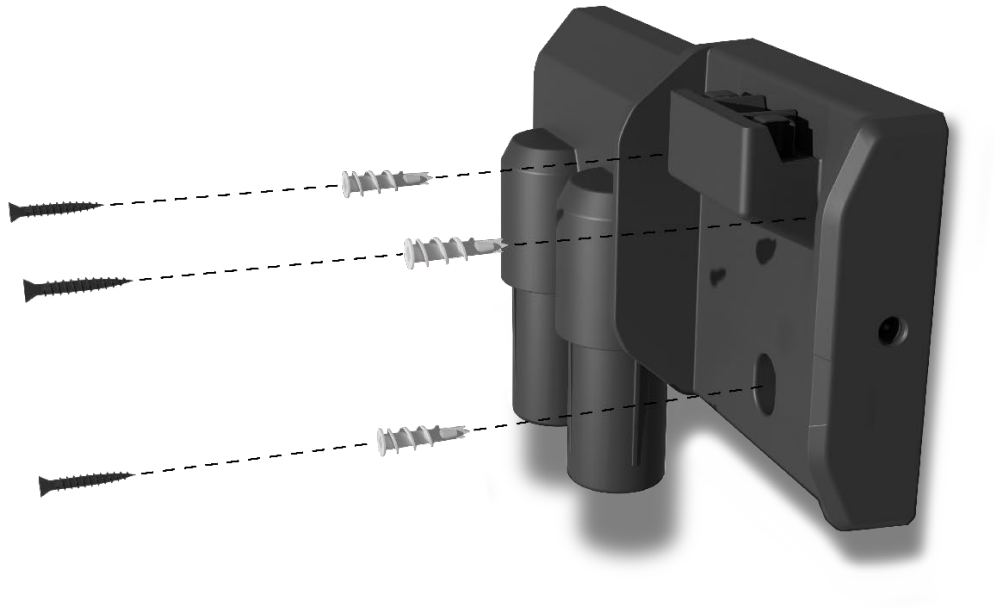

6. Plug the charger in.

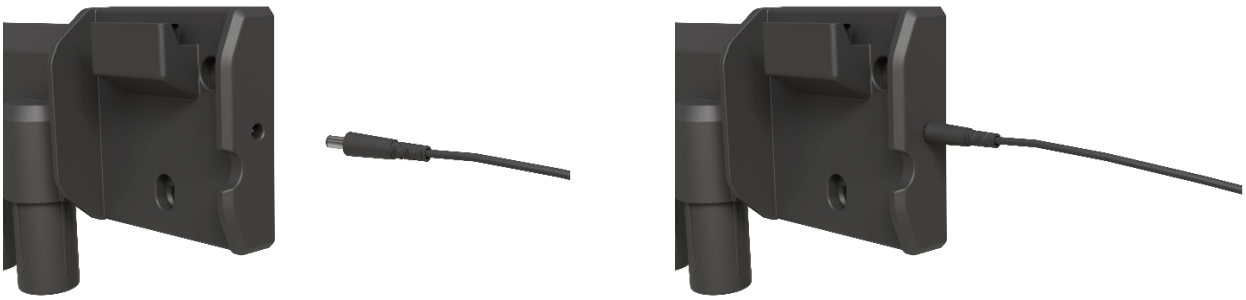

7. Hang tools on the tool caddy.

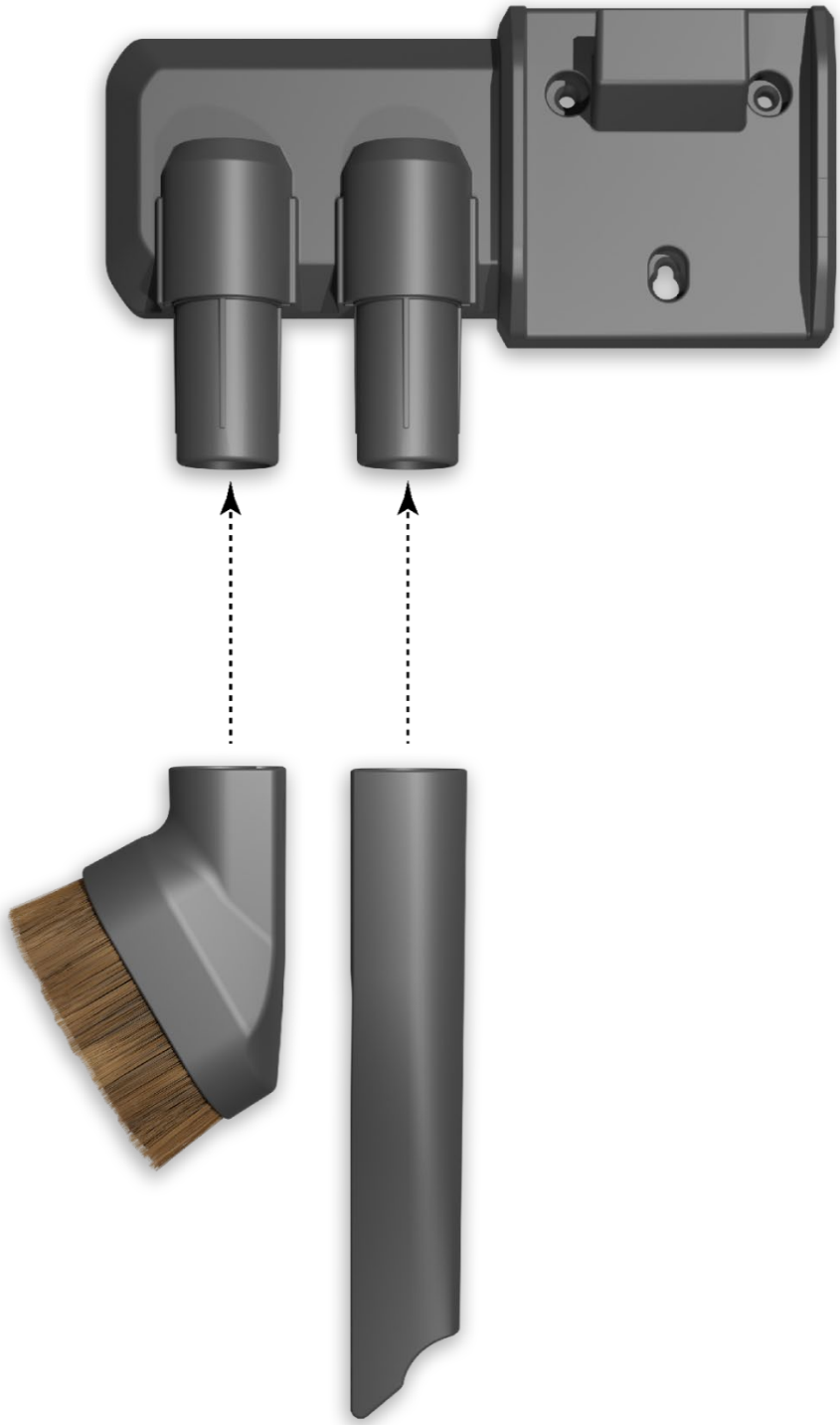

8. Hang vacuum on the tool caddy.

Operation

The PLCRS7P allows connecting all included attachments to either the end of the extendable wand or directly to the vacuum body (See illustrations below).

Using the vacuum

1. Assemble the vacuum (see Assembly section).
2. Attach the desired tool to either the vacuum body or the wand.
3. Pull the trigger to turn the vacuum on.
4. Set the desired vacuum speed with the speed selector button on the back of the vacuum.
5. Pull the trigger again to turn the vacuum off.

NOTE: The vacuum will always power on in “medium” speed mode. This mode is recommended for most cleaning applications.

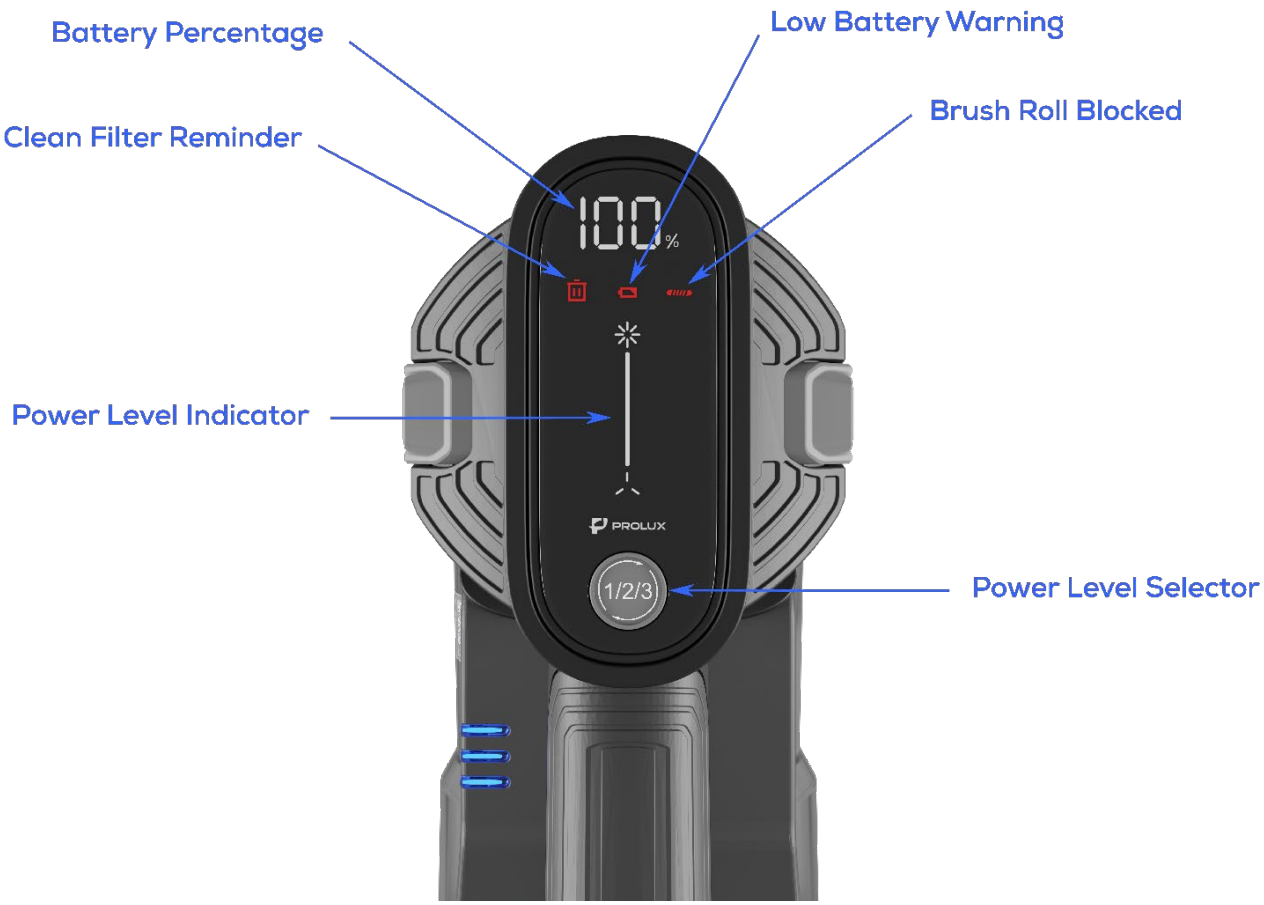

Using the attachments

Duster – for dusting and delicate surfaces such as blinds, fans, and hard surfaces

Crevice – for cleaning hard to reach places such as in between couch cushions and edge cleaning

Power head – for cleaning carpets, rugs, hard floors, stairs, and even upholstery

Changning the battery

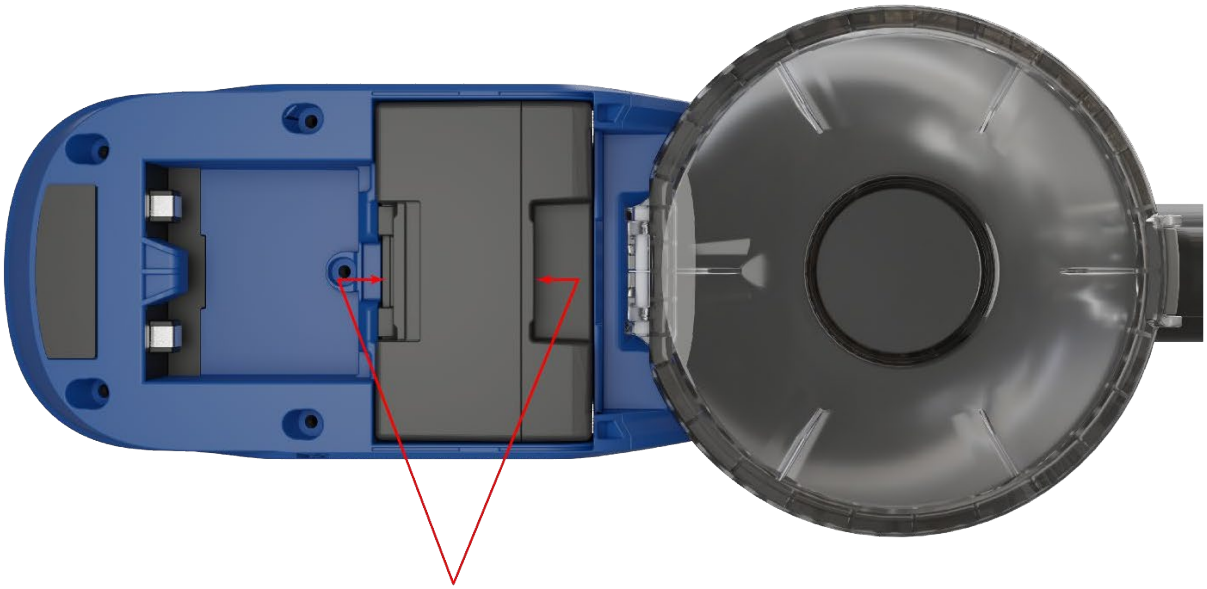

Squeeze here to release battery

Charging the battery

The PLCRS7P battery can be charged three different ways. 1) By plugging the charging cord into the wall- mounted tool caddy and hanging the vacuum on the caddy. 2) By plugging the charging cord directly into the vacuum with the battery installed. 3) By removing the battery and charging it separately from the vacuum.

If you are charging the battery while it is still attached to the vacuum, the LCD display will show battery percentage. If you are charging the battery while it is removed from the vacuum, the LED lights on the battery will indicate the charge level. Once all the lights are illuminated and no longer flashing, the battery is fully charged. It is recommended to remove the battery from the charger once the battery is fully charged.

Maintenance

Emptying the dirt bin

Turn the vacuum off. The dirt bin can be emptied with it either connected to the vacuum body or removed from the vacuum body.

To empty the dirt bin, simply hold the bin over a trash can and press the dirt bin release button. The dirt bin lid will pop open, and the dirt and dust will remove itself using the amazing power of gravity. Shake the bin a couple of times and close the lid. If you removed the dirt bin from the vacuum body, now is the time to reattach it. Now you're ready to get back to cleaning!

To deep clean the dirt bin, remove the HEPA filter (see following section), then pull the inner cyclone out of the dirt bin. Then you can hand wash the components or wipe them down with a damp cloth. Just make sure everything is completely dry before using the vacuum again.

Changing the filters

HEPA filter

Exhaust filters

Brush Roll Replacement

Changing the brush roll is very easy, all you'll need to do is:

1. Remove the power head from the extendable wand.
2. Unlock the brush roll by turning the knob dial on the side of the head to 'OPEN'

3. Once you've unlocked the brush roll simply slide it out.

4. To replace the brush roll, slide it back in and lock the knob dial by turning it to 'CLOSE'

Cleaning the Brush Roll

The EBK-250 power head has a built-in brush roll cleaner which helps you remove any built-up hair, string or any other material which has wrapped around the brush roll. To use the cleaning tool simply slide it out of its storage spot on the underside of the head. There is a hook and razor blade end; work the hook under the built-up hair/material, run the blade through, then use your fingers to pull the hair and material off and throw it in the trash. You may need to run the blade through a few times to completely cut everything out.

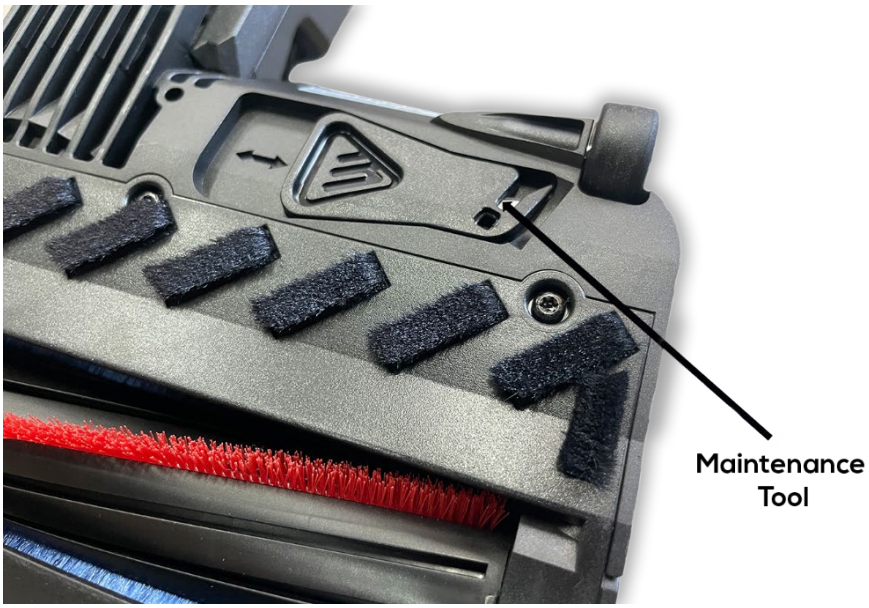

WARNING: Always switch the appliance off and disconnect the battery before cleaning.

ATTENTION: Do not use cleaning or scouring agents or alcohol, as these might damage the appliance.

Clean the outside of the power head and other components using a slightly damp washcloth or microfiber towel only. Wipe down with a dry towel or let air dry.

Troubleshooting

WARNING: Never use a defective appliance. Always switch the appliance off and remove the battery before you start troubleshooting.

Fault	Possible Cause(s)	Solution
The vacuum will not turn on.	The battery is not fully seated into the vacuum.	Remove the battery and re-insert, ensuring the battery is fully seated into the vacuum.
	The vacuum is not charged.	Attach the vacuum to the charger, and ensure the lights on the battery illuminate to show charging.
	The battery or charger is damaged.	Contact support for replacement parts.
Suction power is low.	The filter is clogged.	Change or clean the filter.
	The power nozzle or attachment wand is clogged.	Remove the debris that is causing the clog. If necessary, use a long wooden stick (e.g., a broomstick) or coat hanger to do this.
	The filter is installed incorrectly.	Remove filters and reinstall; make sure these are correctly put into place when reinstalling.
	The tool attachment being used does not work properly on the surface you are vacuuming.	Attach the appropriate tool for the surface you are vacuuming.
	Dirty filter(s).	Change/clean the filter(s).
The vacuum makes unusual noises or is louder than usual.	The power nozzle, attachment wand, or filters are clogged.	Remove any clogs. If necessary, use a long wooden stick (e.g., a broomstick) or coat hanger to do this.
The power head will not turn on.	The power head is not getting power from the vacuum.	Make sure all electrical connections are secure between the power head and the vacuum cleaner.
	There is an obstruction in the brush roll.	Remove the brush roll and clear the obstruction.

Frequently Asked Questions

Q: How often should I replace my filters?	**A:** 3-12 months depending on use and the state of your home. Most people will need replacement filters around 6 months but if you live in an exceptionally dusty environment or have multiple shedding furry friends you will want to change them more frequently.
Q: Why is my vacuum not picking up?	**A:** The dirt bin is full, or there is a clog in the system somewhere. Empty the dirt bin and check the suction directly at the vacuum inlet port. Then check the wand and power head for clogs and remove as necessary.
Q: Where can I find replacement parts and filters?	**A:** Many replacement parts and filters can be found on our website.
Q: I need help with my vacuum, who do I contact?	**A:** Email us at service@proluxcleaners.com and we'll be happy to get you taken care of.

The information contained herein is confidential and is intended to be used by Prolux Cleaners authorized distributors and sales representatives

Prolux Cleaners guarantees its products according to the terms outlined below. There are no other warranties expressed or implied, including any implied warranties of merchantability or fitness for a particular purpose. Under no circumstances will Prolux Cleaners or the seller be liable for any loss, damage, expense, or consequential damage arising in connection with the use or inability to use these products. If a component fails to meet the term of the warranty due to defects in workmanship or materials, Prolux Cleaners will repair or replace the defective component free of charge, including labor according to our flat rate schedule and the Prolux Cleaners Warranty Procedures.

All warranties implied below are subject to the Exceptions and Exclusions clause in this policy located in this document.

Product Category	Polyethylene and Structural Foam	Steel Body Parts	Switches, Motors, Electrical Parts	Labor Paid
	Years	Years	Years	Years
Battery Walk Behind Scrubbers 14" and 18"	5	2	3 Year switches 3-year or 700 hours (whichever comes first) on the Motor 3 Years electrical parts 12-month Pro-Rated Lithium Ion Battery	1
Wide Area Vacuum	5	2	1 Year switches 2-year or 700 hours (whichever comes first) on the Motor 1Years electrical parts	1
Gel Batteries **(3) (4)**	N/A	N/A	12 Months Full Coverage	N/A
Prolux Micro scrubber	3	2	12-month Pro-Rated Lithium Ion Battery	1
Canister Vacuums	5	N/A	2 Year switches 3-year or 800 hours (whichever comes first) on the Motor 3 Years electrical parts	1
Backpack Vacuums	5	N/A	2 Year switches 3-year or 700 hours (whichever comes first) on the Motor 3 Years electrical parts	2
Upright Vacuums	N/A	N/A	1 Year switches 2-year or 500 hours (whichever comes first) on the Motor 1Years electrical parts	1
Garage Vacuums	1	10	2 -Year switches, 2-year or 500 hours (whichever comes first) on the Motors 5-Years Electrical parts	2

Wet Dry Vacuums	10	N/A	2 Year switches 2-year or 500 hours (whichever comes first) on the Motor 2-Year electrical parts	2
Carpet Extractors and Fabric Care	10	2	1 Year switches 2-year or 700 hours (whichever comes first) on the Motor 2-Year electrical parts	1
Central Vacuums	N/A	10	2 -Year switches, 2-year or 800 hours (whichever comes first) on the Motors 5-Years Electrical parts	2
Structural Foam Floor Machines	10	2	3 Year switches 3-year or 700 hours (whichever comes first) on the Motor 3 Years electrical parts	2
Commercial Floor Scrubber 13” /15” 17”/20”	5	3	1- Year switches 2-year or 900 hours (whichever comes first) on the Motor 1-Years electrical parts	1
Ozone Generator	N/A	1	1- Year switches 1-year or 300 hours (whichever comes first) on the Motor 1-Years electrical parts	1
Steam Extractor	5	N/A	1 Year switches 2-year or 700 hours (whichever comes first) on the Motor 2-Year electrical parts	1

Warranty Coverage Information and warranty voids/exclusions

1. Vacuum(s): (Backpack, Cannister, Wide Area and Upright Vacuums) must be used with a Prolux Vacuum bag to qualify for their applicable motor warranty. If the vacuum is used bagless or with another manufacturer’s vacuum bag, the warranty is 1 year. Damage or malfunction caused by negligence, abuse, neglect, unauthorized repair, or any other use not in accordance with the user guide is not covered. Damage caused by misuse (e.g., vacuuming up water or other liquids), abuse, negligent handling, failure to perform required maintenance (e.g., not cleaning the equipment, replacing filters) or damage due to mishandling in transit.
2. Subject to the Gel Battery exception and exclusion paragraph located in this document.
3. Subject to the Gel Battery Warranty Coverage explained on page 3 of this document.
4. Steam Extractor/Steam Carpet Extractor: This warranty does not apply and is void if the pump, vacuum motor, or heater has worn motor brushes, water damage, freezing, chemical build-up, chemical damage, or evidence of abuse, neglect or tampering. brushes. Damage or malfunction caused by negligence, abuse, neglect, unauthorized repair, or any other use not in accordance with the user guide is not covered.
5. Walk behind 14” and 18” automatic scrubbers: This warranty does not apply to normal wear, or to items whose life is dependent on their use and care such as belts, cords, switches, hoses, rubber parts, brushes, electrical motor components or adjustments.
6. Ozone Generators: Warranty does not cover ozone plates or filters.

Warranty Commencement

Warranty shall commence six (6) months from the purchase date by the Prolux Cleaners distributor, or on the purchase date by the original end user. Whichever comes first.

Labor Allowance

Labor Rate

Prolux Cleaners will allow $ 50.00 per hour for warranty labor work. All warranty labor charges will be paid on this basis. Any repair that requires less than fifteen minutes of labor will not be eligible for reimbursement. This labor allowance does not take into consideration troubleshooting or diagnosis time taken for the repair. All repair times are subject to the flat rate schedule enclosed in this document.

If any operation is not covered in this flat rate schedule, Prolux Cleaners will determine a labor rate when a claim is made based on actual repair times by our own service technicians.

Please note: Situations may arise that require special consideration. In these cases, to request special consideration, please contact your Prolux Cleaners warranty department or Prolux Cleaners salesperson and or rep group.

Travel Allowance

Travel allowance charges are covered for 180 days from date of purchase to the original end-user for all **battery equipment** Prolux Cleaners will pay $50.00 per hour to a maximum of 2 hours. Travel allowance for other products is not covered under the warranty policy. It is the purchasers' responsibility to bring equipment to the dealer for warranty repair.

Repair of any components or machines by independent service stations is not allowed except by prior authorization. If unauthorized service is performed by a third party, any debts incurred are the responsibility of the distributor.

Replacement Parts

Replacement parts for machines exceeding the original warranty period are covered for ninety (90) days. Replacement parts that are considered wear items carry no warranty.

Clearance and Demo Products

Clearance and demo products are covered for the remainder of the original warranty period or six (6) months from the date of sale to the original end user, whichever is greater. This excludes gel batteries.

Warranty Parts Shipping Policy

All parts ordered for warranty replacement will be shipped standard ground service. Any requests for expedited delivery will be at the expense of the distributor.

Gel Battery Warranty Coverage

Batteries used in Prolux Cleaners equipment are warranted by their original equipment manufacturers. All warranty claims on batteries will be referred to their original OEM by Prolux Cleaners for inspection. Under no circumstances will Prolux Cleaners or the seller be liable for any loss, damage, expense or consequential damage arising in connection with the use or inability to use these products.

If you have a defective gel battery within its respective warranty period, please follow the instructions below:

1. Contact the Prolux Cleaners' warranty department with the machine information (Serial number, Date of Purchase etc.)
2. If the battery is deemed to be within the warranty period, Prolux Cleaners will arrange a date to inspect and replace (upon inspection approval) the battery with the OEM.
3. The OEM will pick-up and test/inspect the battery to determine the defect.
4. If the battery is deemed to be defective by manufacturers defect, the OEM will replace the battery with a new battery.
   If the defect was caused by the user (i.e. undercharging, left in a discharged state etc.), the battery manufacturer will deliver the defective battery back to you with a report explaining why the warranty coverage was denied.

Prolux Cleaners is not responsible for labor, freight, travel or installation charges associated with battery diagnosis or replacement when the warranty coverage is denied by the OEM.

All warranties implied above are subject to the Exceptions and Exclusions clause in this policy.

Exceptions and Exclusions

Gel Batteries:
Our warranty does not cover batteries that have suffered damage due to over or under charging or batteries that have suffered sulphation due to being left in an uncharged state for any period of time. Warranty will not be allowed under any circumstances if there has been any tampering with the vent covers. Transit or storage damage is also not covered.

Warranty coverage does not apply to parts which fail due to the following conditions:

- Improper or low voltage
- Improper extension cord selection
- Dirty or inefficient water supply
- Inappropriate chemical use
- Improper or insufficient service or maintenance
- Used with clogged or damaged filters.
- Used without a filter.
- Use of a machine in excess of design duration or any conditions damaging to the normal operation of the equipment.
- Disassembly of any components, such as motors, may result in the refusal of warranty coverage.

1. Any parts replaced under warranty are only covered for the remainder of the original warranty period.
2. Warranty service can only be performed by authorized distributors or approved warranty repair centers.
3. Compensation for repairs is determined by the flat rate schedule enclosed in this document.
4. Components that have become defective through wear or abuse are not covered by this warranty.

Wear Items
Numerous items wear out under normal usage conditions. These items are not eligible for warranty coverage. These include vacuum hoses, hose cuffs, hose fittings, brushes, belts, filters, filter screens, grips, skirts, pad drivers or brushes, Clutches, Castors, Pulleys, Wheels, Tires, Light Bulbs, Gaskets, battery cables and connectors, carbon brushes, filters, fuses, drain hoses, power cords, squeegee blades, bearings, O-rings, armatures, floor tools, and vacuum bags.

This is only a partial listing of wearable items. Please contact the Prolux Cleaners warranty department for clarification of wearable items not listed in this document.

Freight Damage
Freight damage is not covered under the Prolux Cleaners warranty policy.

Replacement Parts
Prolux Cleaners will not honor any warranty claims for parts, labor, or travel if the replacement part was not purchased through Prolux Cleaners.

Prolux Cleaners reserves the right to review or modify the above document at any time without specific written or prior notice. This warranty policy precedes all other warranty policies previously published.